BALL VALVES

TIANSHENG VALVE

HIGH QUALITY INDUSTRIAL VALVES



ZHEJIANG TIANSHENG VALVE CO.,LTD

双堵塞双排放球阀
DUAL DISCHARGE VALVE DOUBLE BLOCK

双堵塞双排放球阀通径：4"~24"　100~600mm
双堵塞双排放球阀压力：150LB~2500LB
1.6MPa~32MPa
双堵塞双排放球阀技术标准：
设计标准:API 6D
结构长度：ASME B16.10
连接法兰：ASME B16.5
试验与检验：AIP 598

Double block and bleed ball valve bore：
4"~24"　100~600mm
Double block and bleed ball valve pressure：
150LB~2500LB　1.6MPa~32MPa
Double block and bleed ball valve Technical standard:
Design standard:API6D
Face To Face :ASME B16.10
End Flanges:,ASME B16.5
Inspection and Test :API 598

双堵塞双排放球阀是为了取代传统管路中多个阀门连接的复杂形式而设计的。减少系统中的泄漏点，快速实现排放，关闭功能。双堵塞双排放球阀最大限度地节约了安装空间。简化了安装程序。降低管道系统的压力。方便仪表清洁维护，减少成本。

Double block and bleed ball valves are designed in order to replace the multiple valves connection complex forms in traditional pipeline. Reduce the leakage in system to achieve quickly bleed ,close function. Double block and bleed ball valves maximum save installation space and Simplified installation program. Cut down the pressure in piping system. Convenient instrument Cleaning maintenance and reduce the costs.

产品广泛应用于电力、石油化工、冶金、海洋、石油，天燃气，煤气，制药等各行业的液压系统管路中。

The valves are widely used in electric power, petroleum chemical industry, metallurgy, Marine, oil, natural gas, coal gas, pharmaceutical and other industries hydraulic system pipeline

双道密封O形圈防止阀杆处泄漏
Double sealing o–ring to prevent the leakage at the stem

防吹出阀杆从阀体内部装入，起到上密封座的作用
Blow–out proof stem,it is internally inserted the body and function as the up–sealing seat

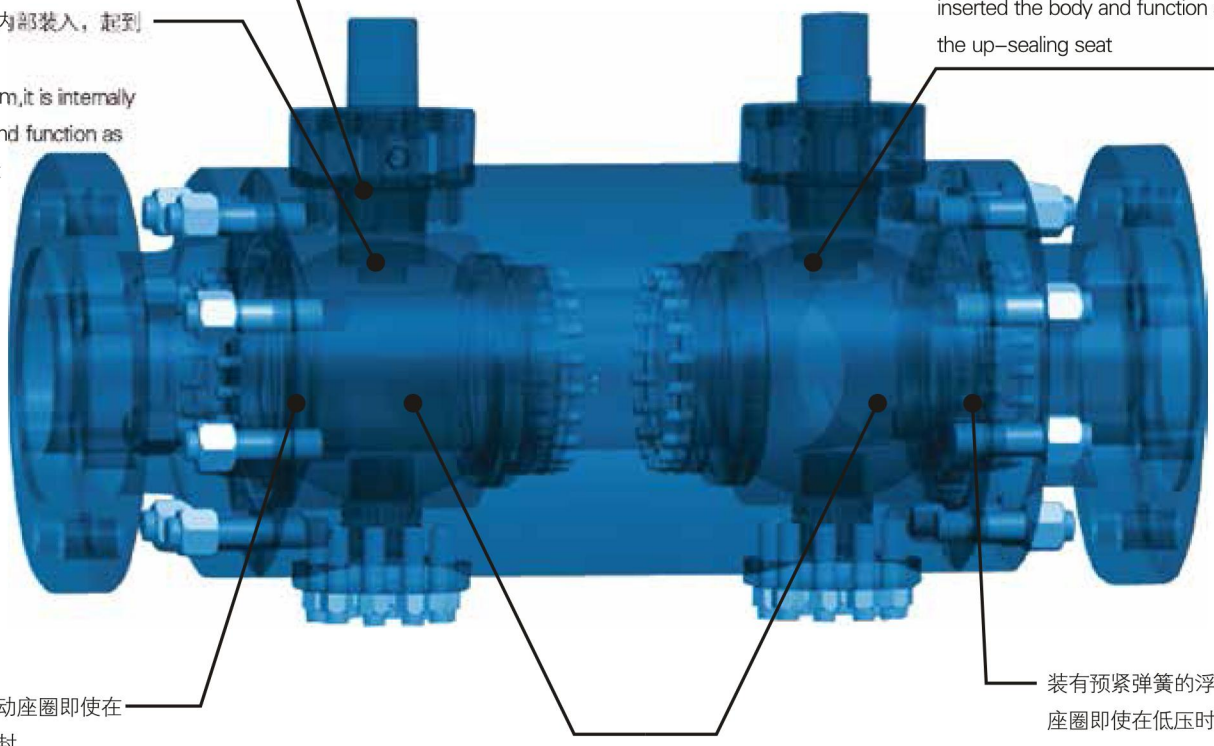

防吹出阀杆从阀体内部装入，起到上密封座的作用
Blow–out proof stem,it is internally inserted the body and function as the up–sealing seat

装有预紧弹簧的浮动座圈即使在低压时也可确保密封.
Equipped with preloaded spring floating seat ring to be ensured seal even in low pressure

采用双球阀是为了减少系统中的泄漏点，实现安全快速实现排放
Adopt double ball valve is to reduce the leakage in the system and to achieve quick–safely bleeding

装有预紧弹簧的浮动座圈即使在低压时也可确保密封.
Equipped with preloaded spring floating seat ring to be ensured seal even in low pressure

双堵塞双排放球阀
DOUBLE BLOVK AND BLEED VALVE 150LB/300LB/600LB

适用标准 Applicable Standards
钢制球阀 Steel Ball Valves API 6D
连接法兰 End Flanges,ASME B16.5
钢制阀门 Steel Valves,ASME B16.34
结构长度 Face To Face ASME B16.10
试验与检验 Inspection and Test API 598

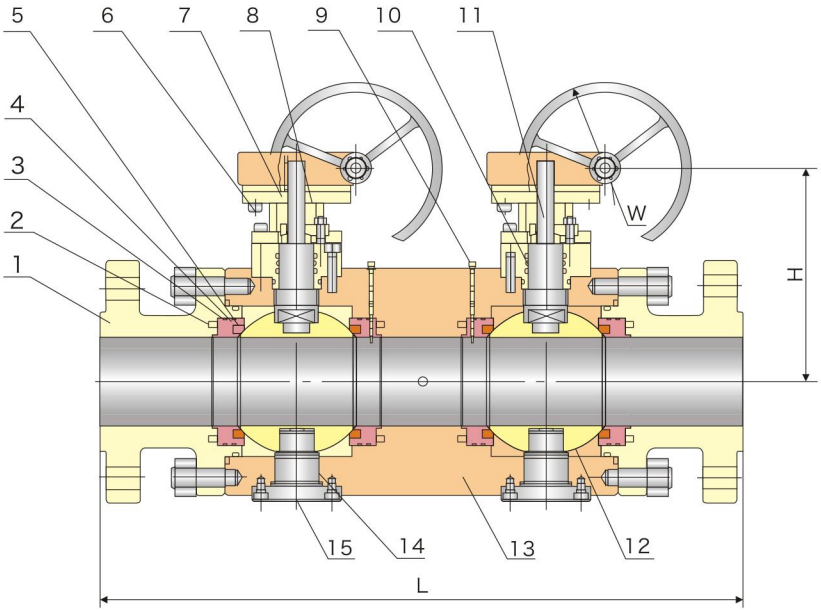

设计描述 Design Description
全通径设计 Full Port Design
螺栓连接阀盖和阀体 Bolted Bonnet Split Body
3片式阀体Three Pieces Body
固定球式 Trunnion Mounted Ball Type
防阀杆吹出 Bolw Out Proof Stem
防火结构 Fire Safe Construction
防静电装置 Anti Statics Device
截断装置 Stopper Device
ISO5211安装平台 ISO 5211 Mounting Pad
法兰或者对焊连接 Flanged or Butt Welding Ends
可带杠杆 Available With Lever
钢制球阀API 6D Steel Ball Valves API 6D
连接法兰ASME B16.5 End Flanges,ASME B16.5
钢制阀门ASME B16.34 Steel Valves,ASME B16.34
结构长度ASME B16.10 Face To Face ASME B16.10
试验与检验API 598 Inspection and Test API 598

部件材料
MATERIALS OF PARTS

序号 No	部件名称 Part Name		材料 ASTM Material				
			碳钢 Carbon Steel		合金钢 Alloy Steel	不锈钢 Stainless Steel	
1	Bonnet	邦尼特	ASTM A105	A352–LCB	A217+WC6	A351–CF8	A351–CF8M
2	Spring	春季	INCONEL750	A313–304	A313–316	A313–316	A313–316
3	Seat O Ring	阀座O环	Viton	Viton1)	Viton	Viton1)	Viton
4	Seat	座椅	ASTM A105+ENP	A350–LF2+ENP	A182+F316	A182–F304	A182–F316
5	Seat ring	阀座	PTFE	PTFE	R.PTFE	Glass Filled PTFE	
6	Stud	梭哈	A193–B7	A320–L7	A193–B7	A193–B8	A193–B8
7	Connection plate	连接板	ASTM A105	A352–LCB	A217–WC6	A351–CF8	A351–CF8
8	Packing case	包装箱			F4		
9	Greease injection valve	Greease注射阀			SS		
10	Stem O–Ring	阀杆O形圈	Viton	Viton	Viton	Viton	Viton
11	Stem	干	A182 F6a	A276–304	A276–316	A276–304	A276–316
12	Ball	球	ASTM A105+ENP	A182–F304	A182–F316	A182–F304	A182–F316
13	Body	美体	ASTM A105	A352–LCB	A217–WC6	A351–CF8	A351–CF8M
14	Trunnion	耳轴	A276–304		A276–316	A276–304	A276–316
15	Lower cover	下盖	ASTM A105	A352–LCB	A217–WC6	A351–CF8	A351–CF8M

ASME 150

SIZE (in.)	A			B	C	W.T (lbs)
	RF	BWE	RTJ			
2"	312	378	334	98	105	81
3"	355	495	378	127	130	165
4"	401	534	422	165	130	330
6"	690	800	711	235	288	455
8"	800	912	823	239	288	660
10"	933	978	956	277	326	1056
12"	1068	1111	1089	316	364	1518
14"	1201	1334	1223	341	395	2031
16"	1334	1467	1356	383	437	2886
18"	1512	1600	1533	417	471	3480
20"	1600	1734	1622	454	508	4473
24"	1867	2000	1890	529	590	6961

ASME 300

SIZE (in.)	A			B	C	W.T (lbs)
	RF	BWE	RTJ			
2"	378	378	406	102	120	92
3"	495	495	522	148	164	176
4"	534	534	562	165	130	374
6"	705	800	733	206	237	583
8"	879	912	907	239	288	770
10"	994	978	1022	277	326	1166
12"	1134	1111	1162	316	364	1681
14"	1334	1334	1362	341	395	2321
16"	1467	1467	1495	383	437	3247
18"	1600	1600	1628	432	486	4490
20"	1734	1734	1768	478	532	5925
24"	2000	2000	2039	578	640	6961

ASME 600

SIZE (in.)	A			B	C	W.T (lbs)
	RF	BWE	RTJ			
2"	511	511	516	105	129	99
3"	623	623	628	147	164	176
4"	756	756	761	165	184	462
6"	978	978	984	212	237	693
8"	1155	1155	1162	254	304	1100
10"	1377	1377	1384	303	359	1980
12"	1467	1467	1472	330	378	2347
14"	1556	1556	1561	360	414	2974
16"	1734	1734	1740	401	455	4385
18"	1911	1911	1916	449	503	5775
20"	2090	2090	2100	485	543	7445
24"	2445	2445	2462	584	646	12269



ZHEJIANG TIANSHENG VALVE CO.,LTD

WENZHOU TIANSHENG INDUSTRY CO.,LTD

Email：admin@tsv.cn
Mobile：+86-577-6796 9770
Whatsapp：+86-13695850057
Address：TianSheng Industrial Park,Dong'ou Industrial Zone,Oubei Town,Wenzhou City,Zhejiang Province,China